LOCUS MAP

NOT TO SCALE

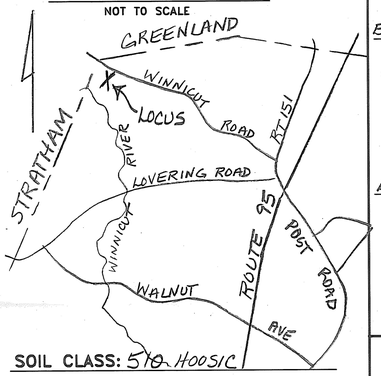

SOIL CLASS: 510 HOOSIC

(SOURCE: USDA–SCS SOIL SURVEY)

BENCH MARKS: DATUM = ASSUMED

#1 SETHUB EL 50.00

#2 TOP HORSESHOE BAR EL 53.06

#3 TOP COVER ON TANK FILTER CLEANOUT EL 61.08

DESIGN INTENT: THE BOTTOM OF THE EFFLUENT DISPOSAL SYSTEM (EDS) SHALL BE CONSTRUCTED AT EL 57.0. THERE IS APPROX 0' FEET ABOVE ORIGINAL GROUND ON THE HIGH CONTOUR OF THE DESIGNED EDS.

SUITABLE REPLACEMENT AREA: 50% OF BED AREA MEETS OR EXCEEDS 4' ABOVE ESHWT.

SYSTEM MUST BE REBUILT IN PLACE OR REDESIGNED.

LEGEND:

- 50 (50) — EXISTING CONTOUR
- PROPOSED CONTOUR
- 50.0 — EXISTING SPOT ELEVATION
- (50.0) — PROPOSED SPOT ELEVATION

NOTES:

1. THIS PLAN IS NOT TO BE CONSTRUED AS A BOUNDARY SURVEY. PROPERTY LINES SHOWN ARE APPROXIMATED BASED ON INFORMATION FROM THE FOLLOWING SOURCE: RCRD 2441-0120, RCRD PLAN #C6170
2. NHDES–WS&PCD SUBDIVISION APPROVAL NUMBER: 10391
3. THIS SYSTEM IS NOT DESIGNED TO HANDLE GARBAGE DISPOSAL WASTE.
4. NO SURFACE WATER OR WELL WITHIN 100' OF PROPOSED SYSTEM. NO HYDRIC SOILS W/IN 100' OF PROPOSED SYSTEM.

TANK CAPACITY REQUIRED FOR 4 BEDROOMS:
1500 GAL WITH 1000 MIN IN FIRST TANK.
2000 GAL PROVIDED WITH 1000 GAL IN FIRST TANK

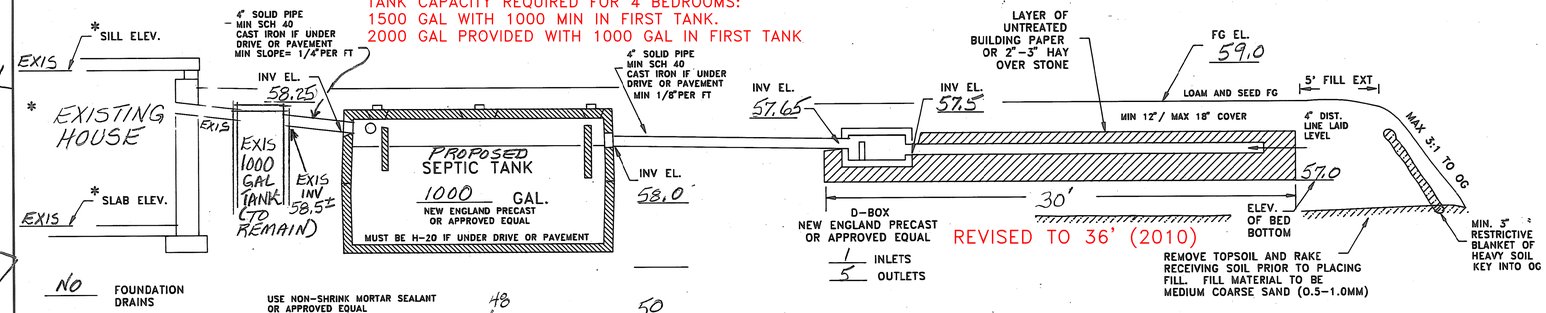
SILL ELEV.
EXIS
EXISTING HOUSE
SLAB ELEV.
4" SOLID PIPE MIN SCH 40 CAST IRON IF UNDER DRIVE OR PAVEMENT MIN SLOPE= 1/4"PER FT
INV EL. 58.25
EXIS 1000 GAL TANK (TO REMAIN)
EXIS INV 58.5±
PROPOSED SEPTIC TANK
1000 GAL.
NEW ENGLAND PRECAST OR APPROVED EQUAL
MUST BE H-20 IF UNDER DRIVE OR PAVEMENT
4" SOLID PIPE MIN SCH 40 CAST IRON IF UNDER DRIVE OR PAVEMENT MIN 1/8"PER FT
INV EL. 58.0
INV EL. 57.65
D-BOX NEW ENGLAND PRECAST OR APPROVED EQUAL
1/5 INLETS/OUTLETS
LAYER OF UNTREATED BUILDING PAPER OR 2"-3" HAY OVER STONE
INV EL. 57.5
FG EL. 59.0
LOAM AND SEED FG
5' FILL EXT
MIN 12" / MAX 18" COVER
4" DIST. LINE LAID LEVEL
57.0
MAX 3:1 TO OG
30'
ELEV. OF BED BOTTOM
REVISED TO 36' (2010)
REMOVE TOPSOIL AND RAKE RECEIVING SOIL PRIOR TO PLACING FILL. FILL MATERIAL TO BE MEDIUM COARSE SAND (0.5–1.0MM)
MIN. 3' RESTRICTIVE BLANKET OF HEAVY SOIL KEY INTO OG
NO FOUNDATION DRAINS
USE NON-SHRINK MORTAR SEALANT OR APPROVED EQUAL

CROSS SECTION DISPOSAL SYSTEM – NOT TO SCALE

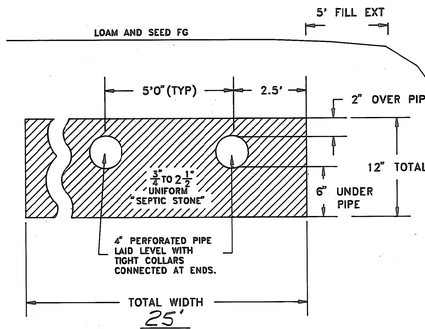

PLAN : 1" = 20'

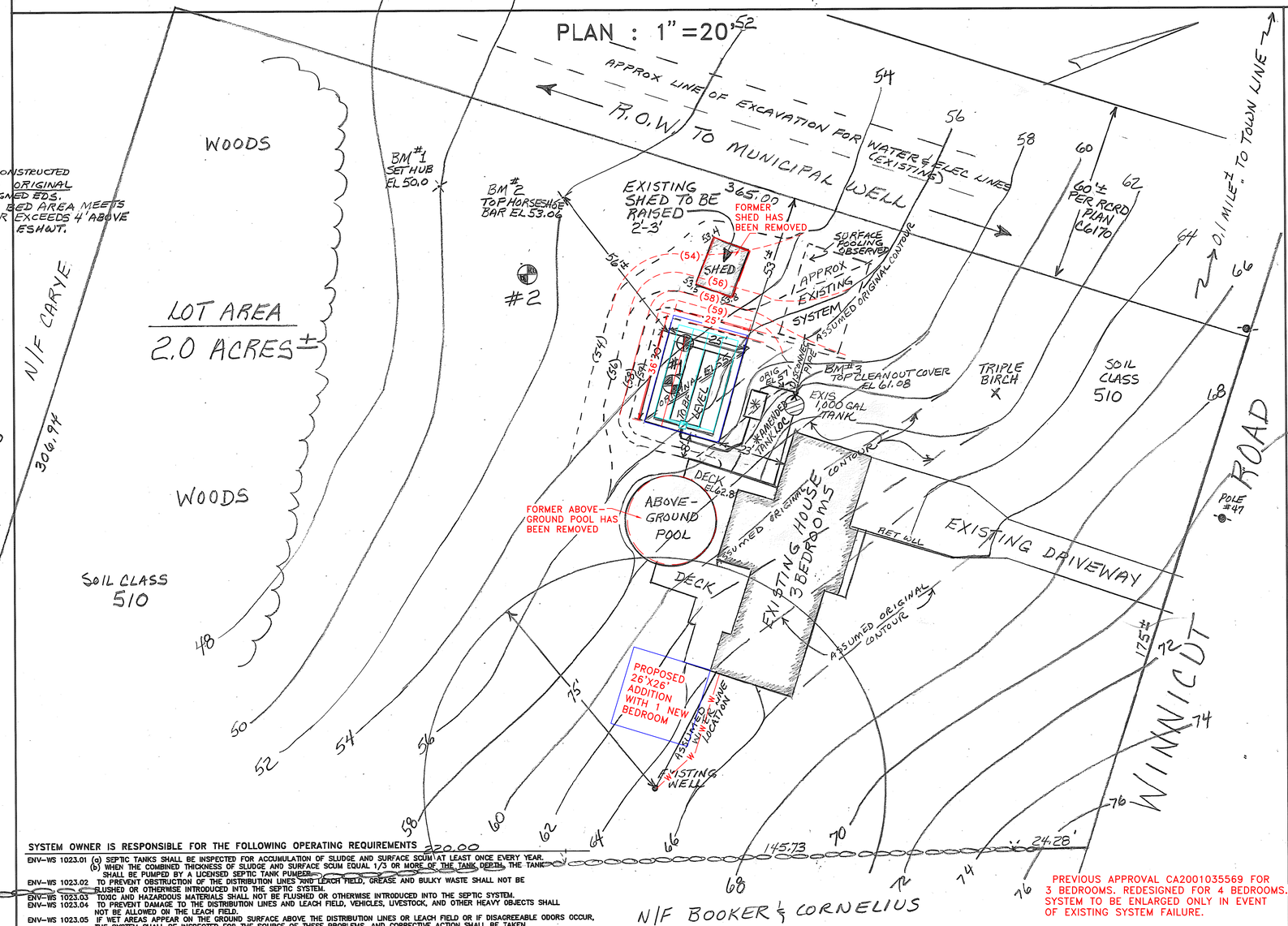

PLOT PLAN

1" = APPROX

SYSTEM OWNER IS RESPONSIBLE FOR THE FOLLOWING OPERATING REQUIREMENTS

ENV–WS 1023.01 (a) SEPTIC TANKS SHALL BE INSPECTED FOR ACCUMULATION OF SLUDGE AND SURFACE SCUM AT LEAST ONCE EVERY YEAR. (b) WHEN THE COMBINED THICKNESS OF SLUDGE AND SURFACE SCUM EQUAL 1/3 OR MORE OF THE TANK DEPTH, THE TANK SHALL BE PUMPED BY A LICENSED SEPTIC TANK PUMPER.

ENV–WS 1023.02 TO PREVENT OBSTRUCTION OF THE DISTRIBUTION LINES AND LEACH FIELD, GREASE AND BULKY WASTE SHALL NOT BE FLUSHED OR OTHERWISE INTRODUCED INTO THE SEPTIC SYSTEM.

ENV–WS 1023.03 TOXIC AND HAZARDOUS MATERIALS SHALL NOT BE FLUSHED OR OTHERWISE INTRODUCED INTO THE SEPTIC SYSTEM.

ENV–WS 1023.04 TO PREVENT DAMAGE TO THE DISTRIBUTION LINES AND LEACH FIELD, VEHICLES, LIVESTOCK, AND OTHER HEAVY OBJECTS SHALL NOT BE ALLOWED ON THE LEACH FIELD.

ENV–WS 1023.05 IF WET AREAS APPEAR ON THE GROUND SURFACE ABOVE THE DISTRIBUTION LINES OR LEACH FIELD OR IF DISAGREEABLE ODORS OCCUR, THE SYSTEM SHALL BE INSPECTED FOR THE SOURCE OF THESE PROBLEMS, AND CORRECTIVE ACTION SHALL BE TAKEN.

PREVIOUS APPROVAL CA2001035569 FOR 3 BEDROOMS. REDESIGNED FOR 4 BEDROOMS. SYSTEM TO BE ENLARGED ONLY IN EVENT OF EXISTING SYSTEM FAILURE.

TP TEST PIT DATA

DATE: 5/7/01

TOWN INSPECTOR: MIKE CUOMO

#1 EL 54.6

0-8" 10YR3/2 FINE SANDY LOAM, GRANULAR FRIABLE
8-24" 10YR 5/4 FINE SANDY LOAM, GRANULAR FRIABLE
24-78" 2.5Y 4/4 STRATIFIED FINE SAND (GRANULAR FRIABLE) AND SILT (FIRM, BLOCKY)
ESHWT @ 24", NO OBS H_2O, NO REFUSAL

#2 EL 50.7

0-10" 10YR3/4 FINE SANDY LOAM, GRANULAR FRIABLE
10-36" 10YR 5/4 GRAVELLY SAND, LOOSE, SINGLE GRAINED
36-72" 2.5Y 4/3 STRATIFIED FINE SAND (FRIABLE, MASSIVE) AND SILT LOAM (BLOCKY, FIRM)
ESHWT @ 36", NO OBS H_2O, NO REFUSAL

PT PERC TEST DATA

DATE: 5/7/01

PERC RATE: 6 MIN/IN DEPTH: 24"

DESIGN LOADING: 3 BEDROOMS

AREA REQUIRED: 675 SF

AREA PROPOSED: 25 × 30 = 750 SF

REVISED APRIL 16, 2010 FOR 4 BEDROOM DESIGN LOADING
@6 MIN/IN PERC, 900 SF LEACH FIELD AREA REQUIRED
ADD 6' TO APPROVED/EXISTING FIELD FOR 25 X 36 = 900 SF PROVIDED.

REVISED PROPOSED REPLACEMENT

SEPTIC SYSTEM PLAN

PREVIOUS APPROVAL #CA2001035569

LOCUS: 76 WINNICUT ROAD
NORTH HAMPTON, NH

OWNER: PAUL DAOUST
76 WINNICUT ROAD
NORTH HAMPTON, NH 03862

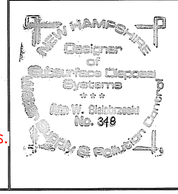

APPLICANT:
STOCKTON SERVICES
PO BOX 1306
HAMPTON, NH 03842

AMENDED 11/08/01 SEPTIC TANK LOCATION
REVISED APRIL 21, 2001

DATE: 5/28/01

APPROVAL: CA2001035569

APPROVAL FOR CONSTRUCTION

CA2010100656 N.H. DEPARTMENT OF ENVIRONMENTAL SERVICES
SUBSURFACE SYSTEMS BUREAU
P.O. BOX 95, 29 HAZEN DRIVE, CONCORD, NH 03302-0095

APPROVAL NO. CA2010100656

THE PLANS AND SPECIFICATIONS FOR SEWAGE OR WASTE DISPOSAL SYSTEM SUBMITTED FOR:

OWNER: ROBERT HART
76 WINNICUT RD
NORTH HAMPTON NH 03862-

Map No./Lot No.: 23/13
Subd. Appvl. No.: 10391
Subd. Name: BOOKER
County: ROCKINGHAM
Registry Book No.: 4871
Registry Page No.: 1677
Probate Docket No.: (If Applicable) O

COPY SENT TO: BUILDING INSPECTOR
PO BOX 710
NORTH HAMPTON NH 03862

Type of System: 4 BR 600 GPD
Town/City Location: NORTH HAMPTON
Street Location: 76 WINNICUT ROAD

BY APPLICANT: PERMIT NO. 00348
STOCKTON SERVICES
PO BOX 1306
HAMPTON NH 03843-1306

Subsurface waste disposal systems must be operated and maintained in a manner so as to prevent nuisance or health hazard due to system failure. (RSA 485-A:37)

It is unlawful to discharge any hazardous chemicals or substances into subsurface waste disposal systems. Included are paints, thinners, gasoline and chlorinated hydrocarbon solvents such as TCE, sometimes used to clean failed septic systems and auto parts. (Env-Ws 1503.04)

ADVISE YOUR CONTRACTOR OF REQUIRED CHANGES IN PLANS AS INDICATED BELOW CONDITIONS

Eric Thomas
ERIC J THOMAS

Approved this date: 05/04/2010
Date amended:
By: N.H. Department of Environmental Services Staff
Amended by: (OVER)

REVISED 8/01
201001133

APPLICANT'S

CA2010100656

REVIEWED AND APPROVED IN ACCORDANCE WITH THE REQUIREMENTS OF THE DEPT OF ENVIRONMENTAL SERVICES WATER DIVISION

Eric Thomas
5-4-10

PERC TEST DATA

RECEIVED APR 28 2010 ROCKINGHAM COUNTY CONSERVATION DISTRICT

DATE 5/7/01

PERC RATE: 6 MIN/IN DEPTH: 24"

DESIGN LOADING: 3 BEDROOMS

AREA REQUIRED: 675 SF

AREA PROPOSED: 25 x 30 = 750 SF

REVISED APRIL 16, 2010 FOR 4 BEDROOM DESIGN LOADING @6 MIN/IN PERC, 900 SF LEACH FIELD AREA REQUIRED ADD 6' TO APPROVED/EXISTING FIELD FOR 25 X 36 = 900 SF PROVIDED.

REVISED
SEPTIC SYSTEM PLAN

PREVIOUS APPROVAL #CA2001035569

LOCUS: 76 WINNICUT ROAD
NORTH HAMPTON, NH
TAX MAP 23 LOT 13

OWNER: ROBERT HART
76 WINNICUT ROAD
NORTH HAMPTON, NH 03862

APPROVED
Town of North Hampton
Septic System Examiner
Michael Cerone
29 APR 10

NEW HAMPSHIRE Designer of Subsurface Disposal Systems
Ann W. Bialobrzeski
No. 348
Water Supply & Pollution Control

APPLICANT:
STOCKTON SERVICES
PO BOX 1306
HAMPTON, NH 03842

REVISED APRIL 16, 2010
DATE:
APPROVAL:

RECEIVED APR 30 2010 Subsurface

589

NOTICE to the installer or owner. The Town of North Hampton requires this system to have a bed bottom (basal area) inspection. Contact the Building Inspector 24 hours prior to inspection at 964-8650.

LOCUS MAP

NOT TO SCALE

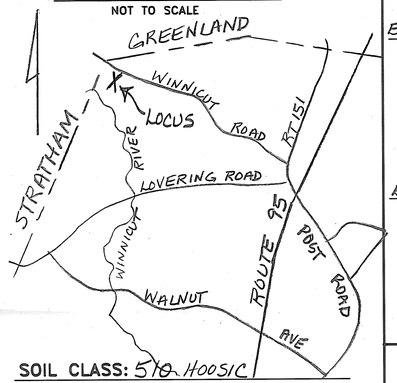

SOIL CLASS: 510 HOOSIC

(SOURCE: USDA–SCS SOIL SURVEY)

BENCH MARKS: DATUM = ASSUMED

#1 SETHUB EL 50.00

#2 TOP HORSESHOE BAR EL 53.06

#3 TOP LOVER ON TANK FILTER CLEANOUT EL 61.08

DESIGN INTENT: THE BOTTOM OF THE EFFLUENT DISPOSAL SYSTEM (EDS) SHALL BE CONSTRUCTED AT EL 57.0. THERE IS APPROX 0' FEET ABOVE ORIGINAL GROUND ON THE HIGH CONTOUR OF THE DESIGNED EDS.

SUITABLE REPLACEMENT AREA: 50% OF BED AREA MEETS OR EXCEEDS 4' ABOVE ESHWT.

SYSTEM MUST BE REBUILT IN PLACE OR REDESIGNED.

LEGEND:

- 50 / (50) — EXISTING CONTOUR
- PROPOSED CONTOUR
- 50.0 — EXISTING SPOT ELEVATION
- (50.0) — PROPOSED SPOT ELEVATION

NOTES:

1. THIS PLAN IS NOT TO BE CONSTRUED AS A BOUNDARY SURVEY. PROPERTY LINES SHOWN ARE APPROXIMATED BASED ON INFORMATION FROM THE FOLLOWING SOURCE: RCRD 2441-0120, RCRD PLAN #C6170
2. NHDES–WS&PCD SUBDIVISION APPROVAL NUMBER: 10391
3. THIS SYSTEM IS NOT DESIGNED TO HANDLE GARBAGE DISPOSAL WASTE.
4. NO SURFACE WATER OR WELL WITHIN 100' OF PROPOSED SYSTEM. NO HYDRIC SOILS W/IN 100' OF PROPOSED SYSTEM.

CROSS SECTION DISPOSAL SYSTEM – NOT TO SCALE

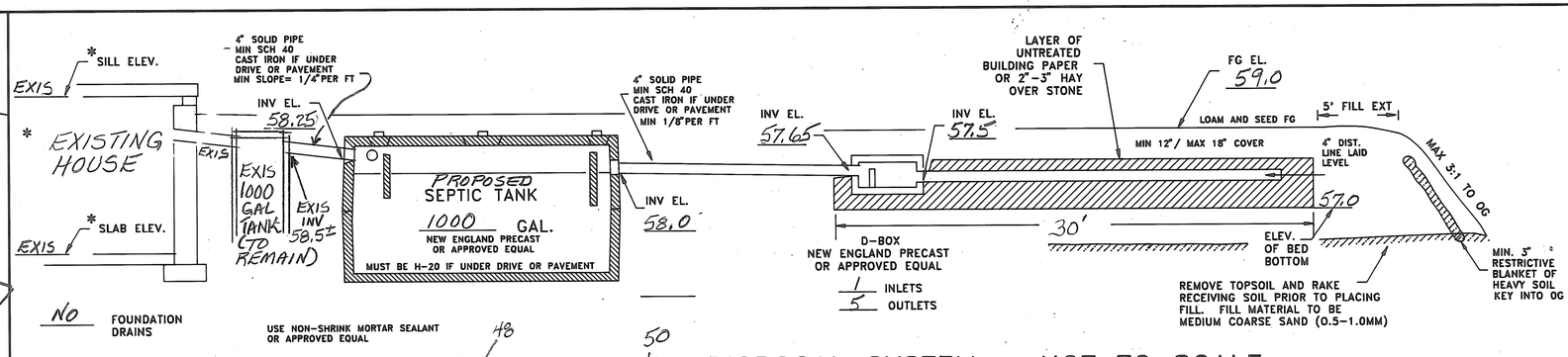
SILL ELEV.
EXIS
EXISTING HOUSE
SLAB ELEV.
EXIS
4" SOLID PIPE MIN SCH 40 CAST IRON IF UNDER DRIVE OR PAVEMENT MIN SLOPE= 1/4"PER FT
INV EL. 58.25
EXIS 1000 GAL TANK (TO REMAIN)
EXIS INV 58.5±
PROPOSED SEPTIC TANK
1000 GAL.
NEW ENGLAND PRECAST OR APPROVED EQUAL
MUST BE H-20 IF UNDER DRIVE OR PAVEMENT
4" SOLID PIPE MIN SCH 40 CAST IRON IF UNDER DRIVE OR PAVEMENT MIN 1/8"PER FT
INV EL. 58.0
INV EL. 57.65
INV EL. 57.5
LAYER OF UNTREATED BUILDING PAPER OR 2"-3" HAY OVER STONE
FG EL. 59.0
LOAM AND SEED FG
5' FILL EXT
MIN 12" / MAX 18" COVER
4" DIST. LINE LAID LEVEL
57.0
MAX 3:1 TO OG
30'
D-BOX NEW ENGLAND PRECAST OR APPROVED EQUAL
1 INLETS
5 OUTLETS
ELEV. OF BED BOTTOM
REMOVE TOPSOIL AND RAKE RECEIVING SOIL PRIOR TO PLACING FILL. FILL MATERIAL TO BE MEDIUM COARSE SAND (0.5–1.0MM)
MIN. 3" RESTRICTIVE BLANKET OF HEAVY SOIL KEY INTO OG
NO FOUNDATION DRAINS
USE NON-SHRINK MORTAR SEALANT OR APPROVED EQUAL

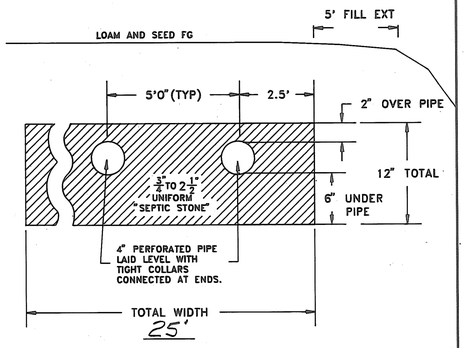

PLAN : 1" = 20'

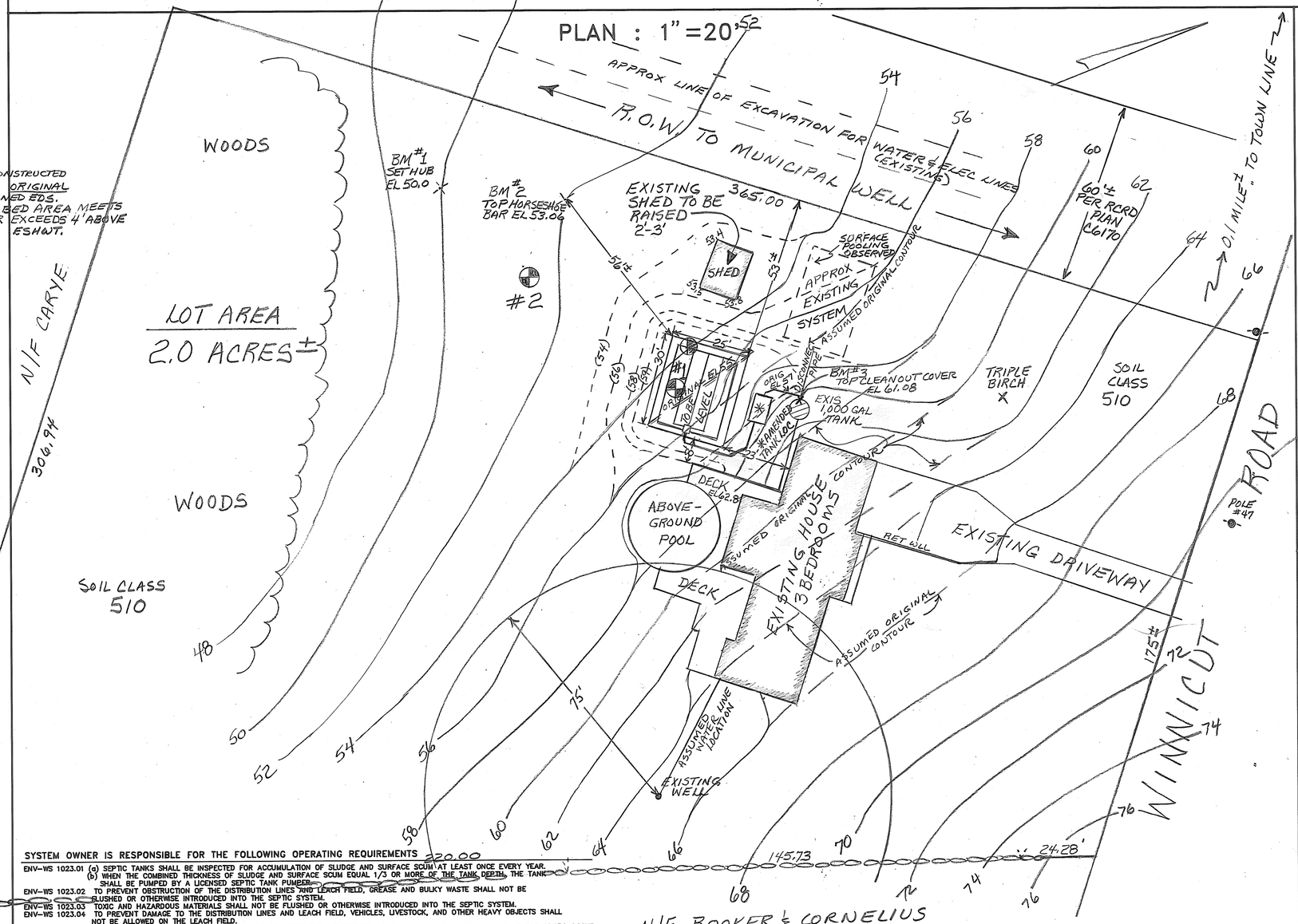

SYSTEM OWNER IS RESPONSIBLE FOR THE FOLLOWING OPERATING REQUIREMENTS

ENV–WS 1023.01 (a) SEPTIC TANKS SHALL BE INSPECTED FOR ACCUMULATION OF SLUDGE AND SURFACE SCUM AT LEAST ONCE EVERY YEAR. (b) WHEN THE COMBINED THICKNESS OF SLUDGE AND SURFACE SCUM EQUAL 1/3 OR MORE OF THE TANK DEPTH, THE TANK SHALL BE PUMPED BY A LICENSED SEPTIC TANK PUMPER.

ENV–WS 1023.02 TO PREVENT OBSTRUCTION OF THE DISTRIBUTION LINES AND LEACH FIELD, GREASE AND BULKY WASTE SHALL NOT BE FLUSHED OR OTHERWISE INTRODUCED INTO THE SEPTIC SYSTEM.

ENV–WS 1023.03 TOXIC AND HAZARDOUS MATERIALS SHALL NOT BE FLUSHED OR OTHERWISE INTRODUCED INTO THE SEPTIC SYSTEM.

ENV–WS 1023.04 TO PREVENT DAMAGE TO THE DISTRIBUTION LINES AND LEACH FIELD, VEHICLES, LIVESTOCK, AND OTHER HEAVY OBJECTS SHALL NOT BE ALLOWED ON THE LEACH FIELD.

ENV–WS 1023.05 IF WET AREAS APPEAR ON THE GROUND SURFACE ABOVE THE DISTRIBUTION LINES OR LEACH FIELD OR IF DISAGREEABLE ODORS OCCUR, THE SYSTEM SHALL BE INSPECTED FOR THE SOURCE OF THESE PROBLEMS, AND CORRECTIVE ACTION SHALL BE TAKEN.

PLOT PLAN

1"=APPROX

TP TEST PIT DATA

DATE: 5/7/01

TOWN INSPECTOR: MIKE CUOMO

#1 EL 54.6

0–8" 10YR3/2 FINE SANDY LOAM, GRANULAR FRIABLE
8–24" 10YR 5/4 FINE SANDY LOAM, GRANULAR FRIABLE
24–78" 2.5Y 4/4 STRATIFIED FINE SAND (GRANULAR FRIABLE) AND SILT (FIRM, BLOCKY)
ESHWT@24", NO OBS H_2O, NO REFUSAL

#2 EL 50.7

0–10" 10YR3/4 FINE SANDY LOAM, GRANULAR FRIABLE
10–36" 10YR 5/4 GRAVELLY SAND, LOOSE, SINGLE GRAINED
36–72" 2.5Y 4/3 STRATIFIED FINE SAND (FRIABLE, MASSIVE) AND SILT LOAM (BLOCKY, FIRM)
ESHWT@36", NO OBS H_2O, NO REFUSAL

PT PERC TEST DATA

DATE: 5/7/01

PERC RATE: 6 MIN/IN DEPTH: 24"

DESIGN LOADING: 3 BEDROOMS

AREA REQUIRED: 675 SF

AREA PROPOSED: 25 × 30 = 750 SF

PROPOSED REPLACEMENT

SEPTIC SYSTEM PLAN

LOCUS: 76 WINNICUT ROAD
NORTH HAMPTON, NH

OWNER: PAUL DAOUST
76 WINNICUT ROAD
NORTH HAMPTON, NH 03862

HAMPTON Designer of Alternative Disposal Systems — Rob W. Stockwell No. 349

APPLICANT:
STOCKTON SERVICES
PO BOX 1306
HAMPTON, NH 03842
AMENDED 11/08/01 SEPTIC TANK LOCATION

DATE: 5/28/01

APPROVAL: CA20010355G9

315